Manual Tires

3”-4” Snap-On Caster Tires

Half the weight, twice the wear, a softer ride and no flats. CEW’s Urethane tires are state of the art in flatproof tire technology!

MIDNIGHT BLACK IS THE STANDARD COLOR FOR ALL 3" AND 4" CASTER TIRES. CUSTOM COLORS ARE AVAILABLE

CROSS SECTION	TIRE SIZE INCHES	TIRE SIZE MILLIMETERS	WHEEL SIZE		DESCRIPTION
			A	B	
	3" x 1"	25 x 80			Black skate wheel Complete with 5/16" I.D. ball bearings
	4" x 1"	25 x 100	3.5"	.43"	Half round, black Ultra low profile Smooth tread
	4" x 1"	25 x 100	3.5"	.65"	Half round, black Untra low profile Smooth tread
	4.3" x 1"	25 x 110	3.9"	.60"	Half round, black Ultra low profile Smooth tread

Note: Cross section drawings vary in scale

3" and 4" casters offer the ultimate in maneuverability and quick steering response. In addition, our proprietary urethane formulations, combine excellent shock absorbing qualities with extraordinary durability. All Alshin microcellular urethane tires are oil resistant, weather resistant and non-marking.

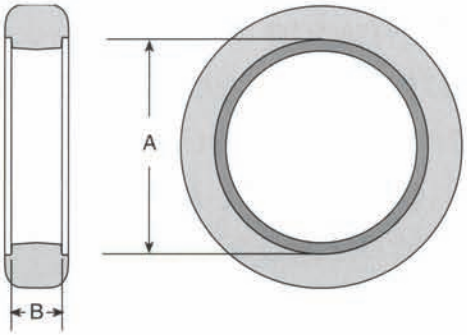

CEW

Custom Engineered Wheels

Manual Tires

5" Snap-On Caster Tires

Half the weight, twice the wear, a softer ride and no flats. CEW's Urethane tires are state of the art in flatproof tire technology!

CHARCOAL GREY IS THE STANDARD COLOR FOR ALL TIRES UNLESS NOTED, CUSTOM COLORS AND SPECIFICATIONS ARE AVAILABLE

CROSS SECTION	TIRE SIZE INCHES	TIRE SIZE MILLIMETERS	WHEEL SIZE		DESCRIPTION
			A	B	
	5" x 1"	25 x 126	3.9"	.65"	Pyramid type Low profile Smooth tread
	5" x 1"	25 x 126	3.9"	.60"	Half round Low profile Smooth tread
	5" x 1"	25 x 126	3.9"	.65"	Half round Low profile Smooth tread
	5" x 1"	26 x 126	3.9"	.80"	Half round Low profile Smooth tread
	5" x 1¼"	28 x 126	3.9"	.85"	Half round Low profile Smooth tread
	5" x 1½"	38 x 126	3.9"	.65"	Wide oval Low profile Smooth tread

Note: Cross section drawings vary in scale

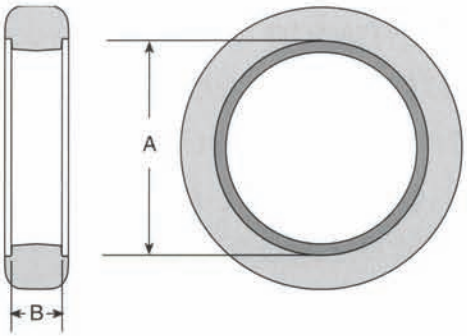

CEW

Custom Engineered Wheels

Manual Tires

6" Snap-On Caster Tires

Half the weight, twice the wear, a softer ride and no flats. CEW's Urethane tires are state of the art in flatproof tire technology!

CHARCOAL GREY IS THE STANDARD COLOR FOR ALL TIRES UNLESS NOTED, CUSTOM COLORS AND SPECIFICATIONS ARE AVAILABLE

CROSS SECTION	TIRE SIZE INCHES	TIRE SIZE MILLIMETERS (ETRTO)	WHEEL SIZE		DESCRIPTION
			A	B	
	6" x 1"	25 x 155	5.2"	.45"	Half round Ultra low profile Smooth tread
	6" x 1"	25 x 150	4.95"	.88"	Half round Low profile Smooth tread
	6" x 1"	25 x 150	4.95"	.65"	Half round Low profile Smooth tread
	6" x 1¼"	32 x 150 (32-86)	3.9"	.60"	Full profile Multi-ribbed tread
	6" x 1¼"	32 x 150 (32-86)	3.9"	.65"	Full profile Multi-ribbed tread.
	6" x 1¼"	32 x 150 (32-86)	3.9"	.80"	Full profile Multi-ribbed tread
	6" x 1¼"	32 x 150 (32-86)	3.9"	.88"	Full profile Multi-ribbed tread
	5" x 1½"	38 x 150	3.9"	.65"	Wide oval Full profile Smooth tread

Note: Cross section drawings vary in sc

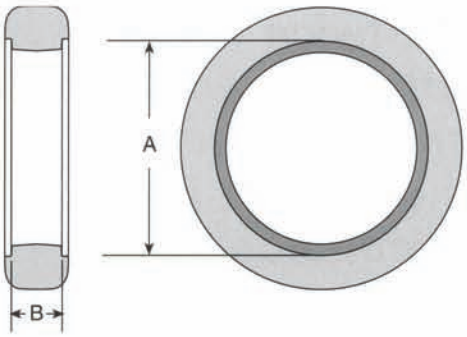

CEW

Custom Engineered Wheels

Manual Tires

7" Snap-On Caster Tires

Half the weight, twice the wear, a softer ride and no flats. CEW's Urethane tires are state of the art in flatproof tire technology!

CHARCOAL GREY IS THE STANDARD COLOR FOR ALL TIRES UNLESS NOTED, CUSTOM COLORS AND SPECIFICATIONS ARE AVAILABLE

CROSS SECTION	TIRE SIZE INCHES	TIRE SIZE MILLIMETER	WHEEL SIZE		DESCRIPTION
			A	B	
	7" x 1"	25 x 177	5.9"	.65	Half round Low profile Smooth tread
	7" x 1"	25 x 177	5.9"	.80"	Half round Low profile Smooth tread
	7½" x 1"	25 x 192	5.9"	.65"	Half round Medium profile Smooth tread
	7½" x 1"	25 x 192	5.9"	.80"	Half round Medium profile Smooth tread
	7" x 1"	25 x 179	6.8"	.75"	Ultra low profile Smooth tread
	7½" x 1.6"	42 x 195	5.9"	.65"	Wide Oval Medium profile Smooth tread
	7½" x 1.6"	42 x 195	5.9"	.80"	Wide Oval Medium profile Smooth tread

Note: Cross section drawings vary in scale

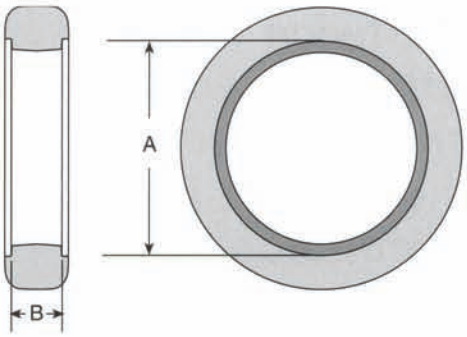

CEW
Custom Engineered Wheels

Manual Tires

8" Snap-On Caster Tires

Half the weight, twice the wear, a softer ride and no flats. CEW's Urethane tires are state of the art in flatproof tire technology!

CHARCOAL GREY IS THE STANDARD COLOR FOR ALL TIRES UNLESS NOTED, CUSTOM COLORS AND SPECIFICATIONS ARE AVAILABLE

CROSS SECTION	TIRE SIZE INCHES	TIRE SIZE MILLIMETERS (ETRTO)	WHEEL SIZE		DESCRIPTION
			A	B	
	8" x 1"	25 x 200	6.8"	.75"	Pyramid style, low profile Smooth tread
	8" x 1"	25 x 200	6.8"	.75"	Half round, low profile Smooth tread
	8" x 1"	25 x 200	6.8"	Fits all widths	Universal design Smooth tread
	8" x 1¼"	32 x 200 (32-140)	5.9"	.65"	Full profile Multi-rib tread
	8" x 1¼"	32 x 200 (32-140)	5.9"	.80"	Full profile Multi-rib tread
	8" x 1½"	38 x 200 (38-140)	5.9"	.65"	Full profile 2-rib tread
	8" x 1½"	38 x 200 (38-140)	5.9"	.80"	Full profile 2-rib tread

Note: Cross section drawings vary in scale

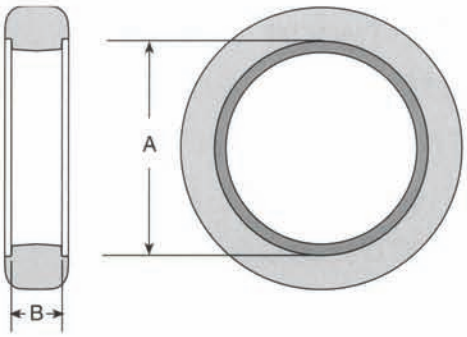

CEW
Custom Engineered Wheels